ECOTECH

SMART WATER

Global Bath Solution Provider

Eco(Xiamen) Technology Inc.
Add: No.2, East Xiafei Road, Haicang District, Xiamen, China
P.C. : 361028
Tel:(0086)-592-6803883
Product Service:(0086)-592-6889999
Fax:(0086)-592-6538888
Website: www.wdiplumbing.com
E-mail: wdisales@wdiplumbing.com

Product Catalogue
-Toilet Seats Series
2024-2025



Xiamen Headquarter of Eco

Eco(Xiamen) Technology Inc.

Established in 1993, ECO is an international company aimed at providing the best bath products and solutions to our valued customers. ECO headquarters in Xiamen, China, with four marketing centers in Xiamen, Hong Kong, the US, and Switzerland, and several branches around the world.

ECO headquarter in Xiamen covers a total area up to 90,000 square meters. It is equipped with world-class smart R&D and manufacturing equipment. ECO is professional on mold design and production as well because it has its own in-house mold company in Xiamen. At the same time, ECO has a production base covering over 100,000 square meters focusing on world-class smart manufacturing, which enables ECO to provide excellent service to our customers.

As a leading bath solution provider, ECO aims to provide outstanding bath products and solutions to well-known global bath brands and ordinary consumers as well. Our current products are categorized into Intelligent Toilet Solutions, Pressure-assisted Flushing Systems, Plumbing Accessories (including Fill and Flush valves, Tank Levers and Push Buttons), Toilet Seats (including Intelligent Seats, Bidet Seats, PP and UF Seats), Same-floor Drainage System (including Concealed Cisterns and Push Plates), and Wall-hung Tanks. ECO is the owner of more than 300 patents in various nations and regions because of our continuous research into new technologies. Its leading product quality and innovation capability create benefits for our customers all over the world. Apart from all these, ECO positively participates in drafting and finalizing national industry standards, and never forgets its mission to do continuous efforts to save every drop of water.

ECO' s vision is to improve people' s living quality. Meanwhile, ECO will carry out ERP+MES system and strive to realize smart manufacturing and industry 4.0. To make a breakthrough in same-floor drainage technique is as well a key aim of ECO in order to promote itself as a professional expert in providing solutions to intelligent WATER system in bathroom space.



Changtai Manufacturing Site of Eco



Eco America



Eco Switzerland



Eco Intelligent Factory

ECO Laboratory——China’s first enterprise laboratory with qualification of tank fitting test



IAPMO RESEARCH AND TESTING, INC.

A NON-PROFIT CORPORATION
5001 E. Philadelphia Street Ontario, CA 91761 (909) 472-4100 Fax (909) 472-4250

This is to certify that

WDI PLUMBING LABORATORY (Lab # IH36)
NO. 2, EAST XIAFEI ROADHAICANG
XIAMEN, FUJIAN, CHINA

is accepted for listing by IAPMO Research and Testing, Inc. as a Manufacturer In-House Testing Laboratory. IAPMO Research and Testing, Inc. agrees to accept test reports prepared by the Laboratory in accordance with the policies and procedures agreed to by the laboratory in the Laboratory Listing Agreement. The Laboratory has satisfactorily demonstrated its compliance to ISO/IEC 17025-2005 as referenced in clause 6.2 of ISO/IEC 17065:2012, and has been verified as capable of performing tests in the following categories:

•Ballcocks/Flushometers• •Plastic Fixtures• •Water Closets•

IAPMO Research and Testing, Inc. will accept from the Laboratory only reports of testing conducted under the direct control and supervision of employees of the Laboratory.
This Laboratory Listing is valid beginning 12/31/2017 and expires after **12/31/2018** . This listing is subject to the conditions set forth by IAPMO Research and Testing, Inc. Any alteration or falsification of this certificate may constitute grounds for delisting of the Laboratory. Reproduction of this certificate, in whole or in part, for advertising purposes without the expressed written permission of IAPMO Research and Testing, Inc. is strictly prohibited.

Russ Chaney
Chief Executive Officer

Jin Luo
Sr. Vice President of Laboratory Recognition



China National Accreditation Service for Conformity Assessment

LABORATORY ACCREDITATION CERTIFICATE

(Registration No. CNAS L10546)

Lab of Xiamen WDI Technology Co., Ltd.

No.2, Xiafei East Road, Xinyang Industrial Area, Haicang District, Xiamen, Fujian, China

is accredited in accordance with ISO/IEC 17025: 2005 General Requirements for the Competence of Testing and Calibration Laboratories(CNAS-CL01 Accreditation Criteria for the Competence of Testing and Calibration Laboratories) for the competence to undertake the service described in the schedule attached to this certificate.

The scope of accreditation is detailed in the attached schedule bearing the same registration number as above. The schedule form an integral part of this certificate.

Date of Issue：2017-12-18
Date of Expiry：2023-12-17
Date of Initial Accreditation：2017-12-18

Signed on behalf of China National Accreditation Service for Conformity Assessment

China National Accreditation Service for Conformity Assessment(CNAS) is authorized by Certification and Accreditation Administration of the People’s Republic of China (CNCA) to operate the national accreditation schemes for conformity assessment. CNAS is a signatory of the International Laboratory Accreditation Cooperation Mutual Recognition Arrangement (ILAC MRA) and the Asia Pacific Laboratory Accreditation Cooperation Mutual Recognition Arrangement (APLAC MRA). The validity of the certificate can be checked on CNAS website at http://www.cnas.org.cn/english/findanaccreditedbody/index.shtml









Intelligent bidet	4-12
Bidet series	13-15
PP toilet seat	16-32
UF toilet seat	33-37
Toilet seat accessories	38-45



TOILET SEATS

Intelligent bidet

Intelligent bidet product series	06-12

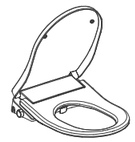

Bidet series

Bidet series / Bidet seat	14-15



PP toilet seat

PP toilet seat / V-shape	16-22
PP toilet seat / O-shape	23-26
PP toilet seat / Open front	27-28
PP toilet seat / D-shape	29-32



UF toilet seat

UF toilet seat / O-shape	33-34
UF toilet seat / D-shape	35-37



Toilet seat accessories

Toilet seat accessories / Reinforced hose	38-40
Toilet seat accessories / Three-way pipe	41-42
Toilet seat accessories / Inlet connection	42
Toilet seat accessories / Top lock	43
Toilet seat accessories / Bottom lock	44-45

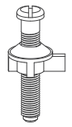

Development history of toilet seats

1999

China' s first PP toilet seat was launched .And this is the first creation technology in China that can be produced a toilet seat in an injection cycle.



2002

The first soft close toilet seat was launched in China. The first damper manufacturer in China.



2003

The first UF toilet seat was launched in China.



2006

The first easy install & remove hinge was launched in China.



The first quick install & remove nut was launched.



2010

Adopt a two-button for lift-off pin hinge technology toilet seat.



2012

The world's first water pressure driven ultrathin bidet seat was launched, realizing personal clean without power supply.



2013

Obtains the first creation invention patent in China for the upgrade on non-leakage damper structure (helix style).



2014

The first creation technology for quick install & remove with one button platform was launched, which has independent intellectual property rights and three invention patents.



The easy install & remove hinge was launched Which obtains China and the United States invention patents.



The first creation for lift-off pin hinge in China was launched which obtains European patents.



The upgraded bidet seat driven by water pressure which has bubble water , self-cleaning and anti-siphon functions.



2015

China' s first mother and son toilet seat was launched which has soft close and quick install& remove functions.



2016

China' s first nightlight hinge platform was launched which can be applied to all the common toilet seats manufactured by ECO.



2017

The first intelligent technology platform was born, with independent intellectual property rights and 6 patents,one-knob operation, focusing on flushing and seat temperature.



2020

The first independent platform P-flush tankless toilet.



FE104 Intelligent Bidet





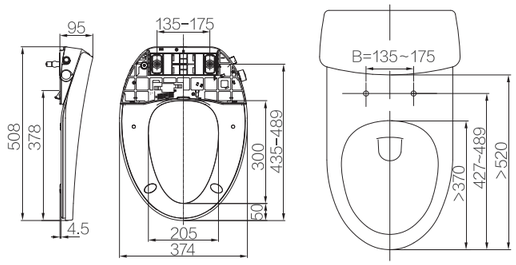

Application

- American V-shape
- Installment size: A=435~489mm B=135~175mm
- Range of static water pressure 0.1~0.75Mpa
- Using tap water or drinking water
- Adaptable voltage: 120V/220V
- Rate power: 960W
- Type of heating: instant
- Waterproof grade: IPX4

Characteristics

- The knob controls the flushing volume
- Key control the seat and water temperature
- Night light function
- Bubble water flush
- Washing function is available at normal temperature in the event of a power outage.

Scope of delivery

- FE104 intelligent bidet
- Accessories (for steady installation)
- Three-way pipe
- Metal/PVC-hose





Coding information

Item code	Description
FE104-12-RD1	Intelligent bidet/220v
FE104-121-RD1	Intelligent bidet/120v

Note: The coding information above is the basic configuration, and please refer to the catalogue of toilet seat accessories for the rest of the configurations.

Product certification

FE105 Intelligent Bidet





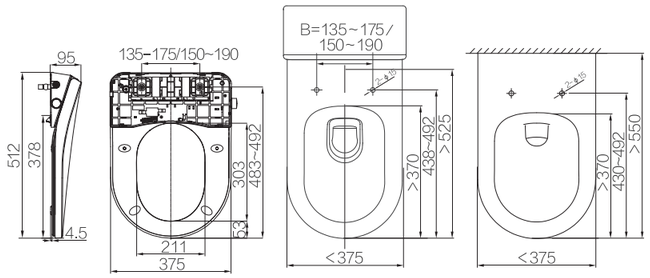

Application

- European D-shape
- Installment size: A=438~492mm B=135~175/150~190mm
- Range of static water pressure 0.1~0.75Mpa
- Using tap water or drinking water
- Adaptable voltage: 120V/220V
- Rate power: 960W
- Type of heating: instant
- Waterproof grade: IPX4

Characteristics

- The knob controls the flushing volume
- Key control the seat and water temperature
- Night light function
- Bubble water flush
- Washing function is available at normal temperature in the event of a power outage.

Scope of delivery

- FE105 intelligent bidet
- Accessories (for steady installation)
- Three-way pipe
- Metal/PVC-hose



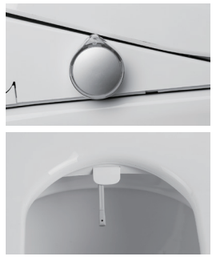

Coding information

Item code	Description
FE105-12-RD1	Intelligent bidet/220v
FE105-121-RD1	Intelligent bidet/120v

Note: The coding information above is the basic configuration, and please refer to the catalogue of toilet seat accessories for the rest of the configurations.

Product certification

FE110 Intelligent Bidet





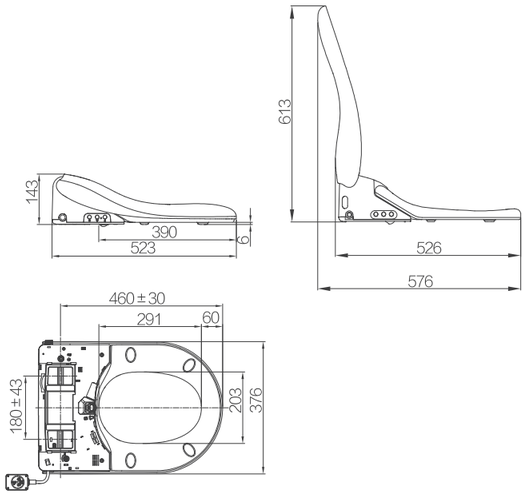

Application

- Applicable to european ceramics
- Installment size: see installation dimension drawing
- Range of static water pressure 0.1Mpa–0.75Mpa
- Using tap water or drinking water
- Rated voltage: 220V/50Hz
- Water temperature: 4℃~35℃
- Ambient temperature: 4℃~40℃
- Rated power: 930W
- Type of heating: instant
- Nozzle, seat: antibacterial material
- Waterproof grade: IPX4

Side entry type

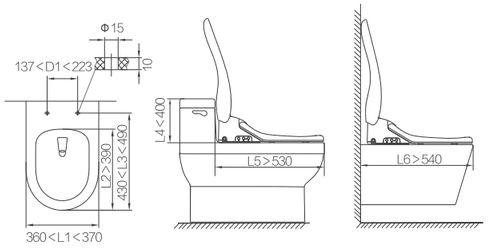

Bottom entry type

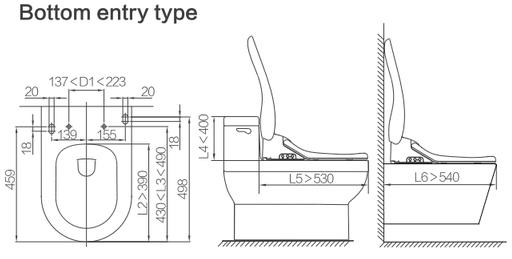

Characteristics

- Rear wash
- Lady wash
- Instant heating
- Oscillate massage
- Pulsate massage
- Mixed massage
- Seat heating
- Warm air drying
- Deodorization
- Self-cleaning nozzle
- Soft close
- Antibacterial seat
- UV disinfection of nozzle
- Adjustable washing volume
- Nozzle position adjust
- Water temp adjust, smart control
- Seat temp adjust, smart control
- Air temp adjust, smart control

Scope of delivery

- FE110 intelligent bidet
- Installation accessories
- Metal/PVC-hose
- Remote control and accessories

Coding information

Item code	Description
FE110-12-RD1	Intelligent toilet seat /Without drying/Without deodorization/Without UV Disinfection /Side-in water and electricity/220V
FE110-10-RD2	Intelligent toilet seat /Drying/Deodorization/ UV Disinfection /Side-in water and electricity /220V
FE110-12-RD3	Intelligent toilet seat /Drying/Deodorization/ UV Disinfection /Off-seat flush/Bottom entry water and electricity/220V

FE115V Intelligent Toilet



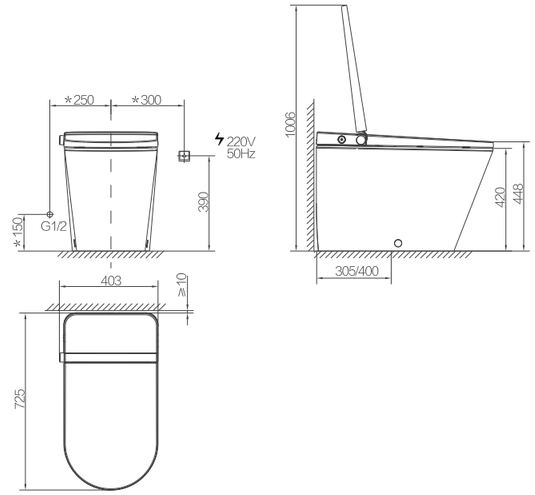

With V-Flush Flush system

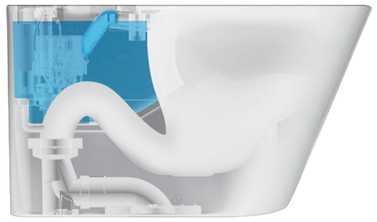

Application

- Installation method: floor standing
- Installation dimensions: see installation drawing
- Range of static water pressure 0.14MPa ~ 0.75MPa
- Using tap water or drinking water
- Adaptable voltage: 220V
- Rated power: 930W
- Type of heating: instant
- Operation method: knob, remote control
- Waterproof grade: IPX4

Installation size

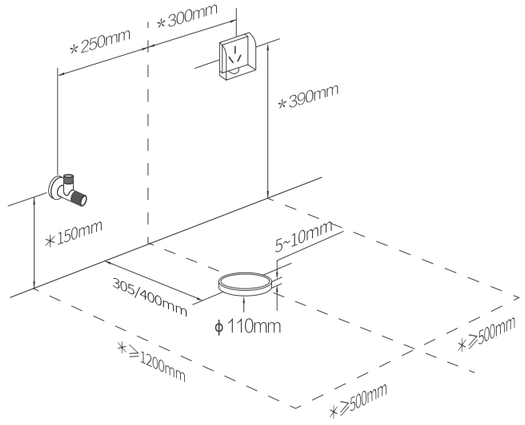

- The above dimensions are all measured after the floor tiles and wall tiles have been laid
- Confirm whether the distance from the center of the drain outlet to the wall (hole distance) matches the intelligent toilet
- The dimensions with * represents the recommended dimensions (standard layout)
- For more comfortable, recommend to leave enough space for installation and use (as shown by the dotted line in the above figure)

Characteristics

- Rear wash
- Lady wash
- Instant heating
- Seat heating
- Nozzle cleaning
- Off-seat auto flush
- Soft close
- Antibacterial seat
- Pulsate massage
- Intelligent night light
- Warm air drying
- Deodorization
- Adjustable water temperature
- Adjustable seat temperature
- Adjustable air temperature
- Adjustable washing volume

Scope of delivery

- Intelligent toilet
- Installation accessories
- Metal/PVC-hose
- Remote control and accessories

Coding information

Item code	Description
FE115-32-RD1	FE115V intelligent toilet/220V/305
FE115-32-RD2	FE115V intelligent toilet/220V/400

FE115P Intelligent Toilet



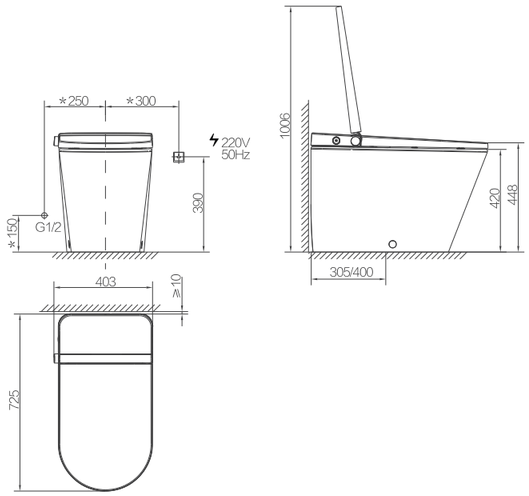

With P-Flush Flush system



Application

- Installation method: floor standing
- Installation dimensions: see installation drawing
- Range of static water pressure 0.14MPa ~ 0.75MPa
- Using tap water or drinking water
- Adaptable voltage: 220V
- Rated power: 930W
- Type of heating: instant
- Operation method: knob, remote control
- Waterproof grade: IPX4

Installation size

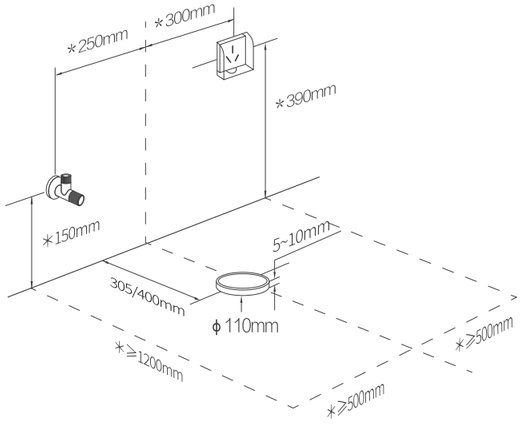

- The above dimensions are all measured after the floor tiles and wall tiles have been laid
- Confirm whether the distance from the center of the drain outlet to the wall (hole distance) matches the intelligent toilet
- The dimensions with * represents the recommended dimensions (standard layout)
- For more comfortable, recommend to leave enough space for installation and use (as shown by the dotted line in the above figure)

Characteristics

- Rear wash
- Lady wash
- Instant heating
- Seat heating
- Nozzle cleaning
- Off-seat auto flush
- Soft close
- Antibacterial seat
- Pulsate massage
- Intelligent night light
- Warm air drying
- Deodorization
- Adjustable water temperature
- Adjustable seat temperature
- Adjustable air temperature
- Adjustable washing volume

Scope of delivery

- Intelligent toilet
- Installation accessories
- Metal/PVC-hose
- Remote control and accessories

Coding information

Item code	Description
FE115-32-RD1	FE115P intelligent toilet/220V/305
FE115-32-RD2	FE115P intelligent toilet/220V/400

FE116 Light Intelligent Toilet



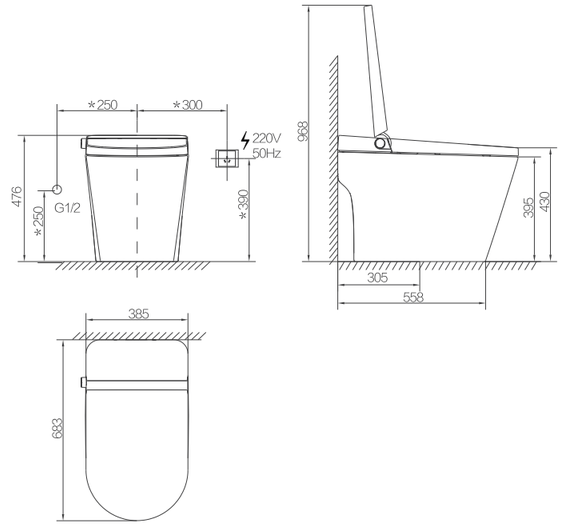



Application

- Installation method: floor standing
- Installation dimensions: see installation drawing
- Range of static water pressure 0.14MPa ~ 0.75MPa
- Using tap water or drinking water
- Rough in: 305mm

Installation size

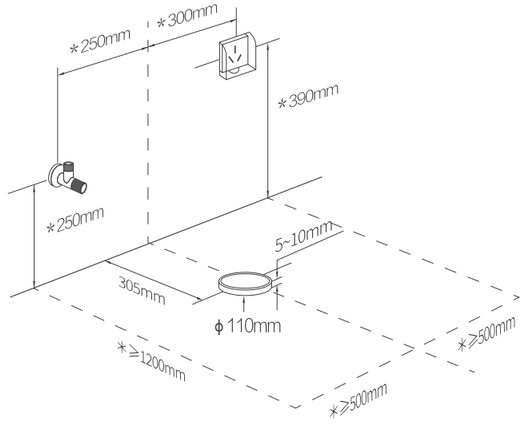

- The above dimensions are all measured after the floor tiles and wall tiles have been laid
- Confirm whether the distance from the center of the drain outlet to the wall (hole distance) matches the intelligent toilet
- The dimensions with * represents the recommended dimensions (standard layout)
- For more comfortable, recommend to leave enough space for installation and use (as shown by the dotted line in the above figure)

Characteristics

- Seat heating
- Remote flush
- One-knob operation
- Solenoid valve flushing system
- Quick release and quick install, more simple and convenient
- Slow close and silent
- PP material

Scope of delivery

- Intelligent toilet
- Angle valves
- Metal/PVC-hose
- Remote control and accessories

Coding information

Item code	Description
FE116-31-RD1	FE116 Seat heating toilet/Manual open/RF remote control/220V/305

FE116 Intelligent Toilet





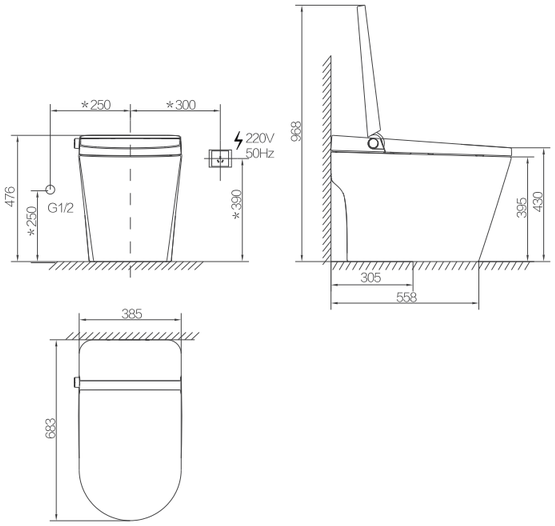

Application

- Installation method: floor standing
- Installation dimensions: see installation drawing
- Range of static water pressure 0.14MPa ~ 0.75MPa
- Using tap water or drinking water
- Adaptable voltage: 220V
- Rated power: 930W
- Type of heating: instant
- Waterproof grade: IPX4

Installation size

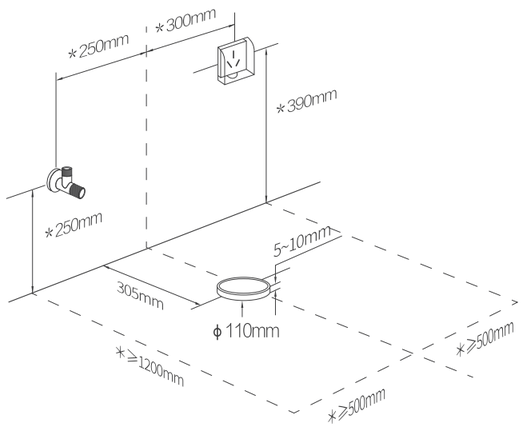

- The above dimensions are all measured after the floor tiles and wall tiles have been laid
- Confirm whether the distance from the center of the drain outlet to the wall (hole distance) matches the intelligent toilet
- The dimensions with * represents the recommended dimensions (standard layout)
- For more comfortable, recommend to leave enough space for installation and use (as shown by the dotted line in the above figure)

Characteristics

- Bidet seat provided
- Self-clean nozzle
- Oscillate massage
- Remote flush
- One-knob operation
- Solenoid valve flushing system
- Quick release and quick install, more simple and convenient
- Slow close and silent
- PP material

Scope of delivery

- Intelligent toilet
- Angle valves
- Metal/PVC-hose
- Remote control and accessories

Coding information

Item code	Description
FE116-32-RD1	FE116 Intelligent toilet/Manual open/Drying and deodorization/220V/305/ Medium-end
FE116-32-RD2	FE116 Intelligent toilet/Manual open/Without drying and deodorization/220V/305/Low-end
FE116-33-RD1	FE116 Intelligent toilet /Auto open/ Drying and deodorization/220V/305/High-end

Bidet Seat FB106



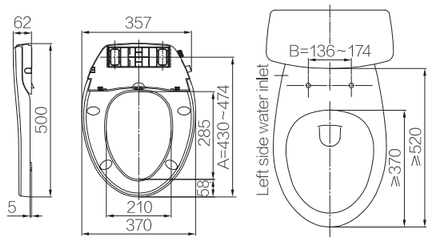

Application

- American elongated V-shape
- Installment size: A=452±22mm,B=155±19mm
- Range of static water pressure: 0.07-0.8MPa
- Can be sold in USA with CUPC Certification
- Clean water using for bidet seat, prohibiting using neutral water, hard water, rain water
- Heating water device provided for warm water using

Characteristics

Bidet seat provided
- Self-clean nozzle
- Flush lever can be rotated to adjust and control wash
- Flush volume can be adjusted
- Bubble water washing provided
- One-key easily disassemble button
- Soft close and silence
- Upper/down mounted lock
- PP material

Scope of delivery

- Accessories (for steady installation)
- Three-way pipe
- Metal/PVC-hose

Coding information

Item code	Description
FB106-00-YYB1	American V-shape bidet seat; left side connection, screw thread R1/2
FB106-02-YYB1	American V-shape bidet seat; left sideconnection, screw thread R1/2, self-clean, bubble water for washing

Note: The coding information above is the basic configuration, and please refer to the catalogue of toilet seat accessories for the rest of the configurations.

Product certification

Bidet Seat FB107



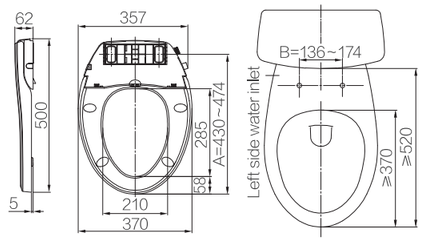

Application

- American elongated V-shape
- Installment size: A=452±22mm,B=155±19mm
- Range of static water pressure: 0.07-0.8MPa
- Qualified for CUPC Certification
- Clean water using for bidet seat, prohibiting using neutral water, hard water, rain water
- Heating water device provided for warm water using

Characteristics

- Bidet seat provided
- Self-clean nozzle
- Flush lever can be rotated to adjust and control wash
- Flush volume can be adjusted
- Bubble water washing provided
- One-key easily disassemble button
- Soft close and silence
- Upper/down mounted lock
- PP material

Scope of delivery

- Accessories (for steady installation)
- Three-way pipe
- Metal/PVC-hose

Coding information

Item code	Description
FB107-00-YYB1	American V-shape bidet seat; left side connection, screw thread R1/2
FB107-02-YYB1	American V-shape bidet seat; left side connection, screw thread R1/2, self-clean, bubble water for washing

Note: The coding information above is the basic configuration, and please refer to the catalogue of toilet seat accessories for the rest of the configurations.

Product certification

Bidet Seat FB109



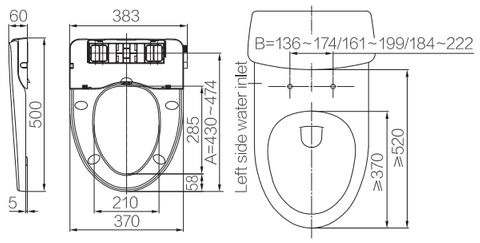

Application

- American elongated V-shape
- Installment size: A=452±22mm, B=155/180/203±19mm
- Range of static water pressure: 0.07-0.8MPa
- Clean water using for bidet seat, prohibiting using neutral water, hard water, rain water
- Heating water device provided for warm water using

Characteristics

- Bidet seat provided
- Self-clean nozzle
- Flush lever can be rotated to adjust and control wash
- Flush volume can be adjusted
- Bubble water washing provided
- One-key easily disassemble button
- Soft close and silence
- Upper/down mounted lock
- PP material

Scope of delivery

- Accessories (for steady installation)
- Three-way pipe
- Metal/PVC-hose

Coding information

Item code	Description
FB109-00-YYB1	American V-shape bidet seat; left side connection, screw thread R1/2, B=155±19mm
FB109-02-YYB1	American V-shape bidet seat; left side connection, screw thread R1/2, self-clean, bubble water for washing, B=155±19mm

Note: The coding information above is the basic configuration, and please refer to the catalogue of toilet seat accessories for the rest of the configurations.

Bidet Seat FB104



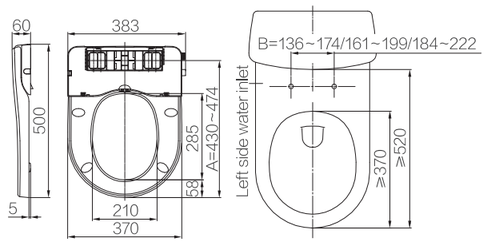

Application

- European U-shape
- Installment size: A=452±22mm, B=155/180/203±19mm
- Range of static water pressure: 0.07-0.8MPa
- Clean water using for bidet seat, prohibiting using neutral water、hard water、rain water
- Heating water device provided for warm water using

Characteristics

- Bidet seat provided
- Self-clean nozzle
- Flush lever can be rotated to adjust and control wash
- Flush volume can be adjusted
- Bubble water washing provided
- One-key easily disassemble button
- Soft close and silence
- Upper/down mounted lock
- PP material

Scope of delivery

- Accessories (for steady installation)
- Three-way pipe
- Metal/PVC-hose

Coding information

Item code	Description
FB104-00-YYB1	European U-shape bidet seat; left side connection, screw thread R1/2, B=155±19mm
FB104-02-YYB1	European U-shape bidet seat; left side connection, screw thread R1/2, self-clean nozzle, bubble water for washing, B=155±19mm

Note: The coding information above is the basic configuration, and please refer to the catalogue of toilet seat accessories for the rest of the configurations.

Product certification

Bidet Seat FB105



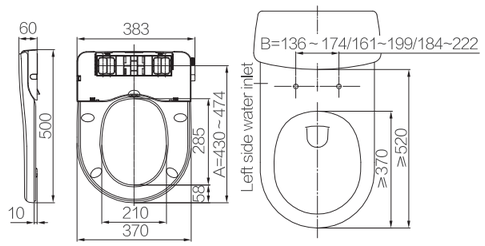

Application

- European U-shape
- Installment size: A=452±22mm, B=155/180/203±19mm
- Range of static water pressure: 0.07-0.8MPa
- Clean water using for bidet seat, prohibiting using neutral water, hard water, rain water
- Heating water device provided for warm water using

Characteristics

- Bidet seat provided
- Self-clean nozzle
- Flush lever can be rotated to adjust and control wash
- Flush volume can be adjusted
- Bubble water washing provided
- One-key easily disassemble button
- Soft close and silence
- Upper/down mounted lock
- PP material

Scope of delivery

- Accessories (for steady installation)
- Three-way pipe
- Metal/PVC-hose

Coding information

Item code	Description
FB105-00-YYB1	European U-shape bidet seat; left side connection, screw thread R1/2, B=155±19mm
FB105-02-YYB1	European U-shape bidet seat; left side connection, screw thread R1/2, self-clean nozzle, bubble water for washing, B=155±19mm

Note: The coding information above is the basic configuration, and please refer to the catalogue of toilet seat accessories for the rest of the configurations.

Bidet Seat FB108



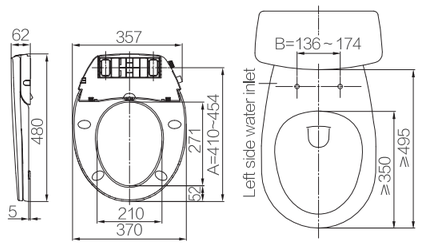

Application

- American O-shape
- Installment size: A=432±22mm,B=155±19mm
- Range of static water pressure: 0.07-0.8MPa
- Clean water using for bidet seat, prohibiting using neutral water, hard water, rain water
- Heating water device provided for warm water using

Characteristics

- Bidet seat provided
- Self-clean nozzle
- Flush lever can be rotated to adjust and control wash
- Flush volume can be adjusted
- Bubble water washing provided
- One-key easily disassemble button
- Soft close and silence
- Upper/down mounted lock
- PP material

Scope of delivery

- Accessories (for steady installation)
- Three-way pipe
- Metal/PVC-hose

Coding information

Item code	Description
FB108-00-YYB1	American O-shape bidet seat; left side connection, screw thread R1/2,
FB108-02-YYB1	American O-shape bidet seat; left side connection, screw thread R1/2, self-clean nozzle, bubble water for washing

Note: The coding information above is the basic configuration, and please refer to the catalogue of toilet seat accessories for the rest of the configurations.

Product certification

Item Code: I1225S



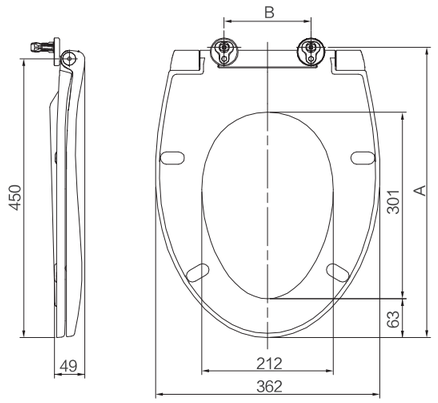

Hinge		Installation size		Coordinate bolts		Softclose	No softclose
Code	Illustration	A	B	Installations way	Code		
I204		450 ± 24	140 ± 48	Top lock	I106	●	
				Bottom lock	I504		
		450 ± 41	140 ± 82	Top lock	I106	●	
				Bottom lock	I504		

Item Code: I1222/I1222S



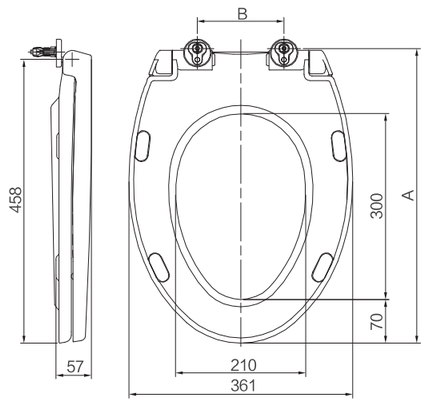

Hinge		Installation size		Coordinate bolts		Softclose	No softclose
Code	Illustration	A	B	Installations way	Code		
I202		458 ± 24	140 ± 48	Top lock	I106	●	
				Bottom lock	I504		
		458 ± 41	140 ± 82	Top lock	I106	●	
				Bottom lock	I504		
I203		458 ± 24	140 ± 48	Top lock	I106		●
				Bottom lock	I504		
		458 ± 41	140 ± 82	Top lock	I106		●
				Bottom lock	I504		

Item Code: I1223/I1223S



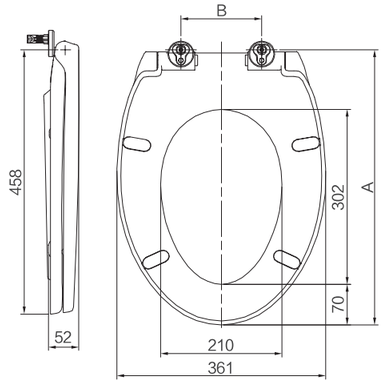

Hinge		Installation size		Coordinate bolts		Softclose	No softclose
Code	Illustration	A	B	Installations way	Code		
I202		458 ± 24	140 ± 48	Top lock	I106	●	
				Bottom lock	I504		
		458 ± 41	140 ± 82	Top lock	I106	●	
				Bottom lock	I504		
I203		458 ± 24	140 ± 48	Top lock	I106		●
				Bottom lock	I504		
		458 ± 41	140 ± 82	Top lock	I106		●
				Bottom lock	I504		

Item Code: I1226/I1226S



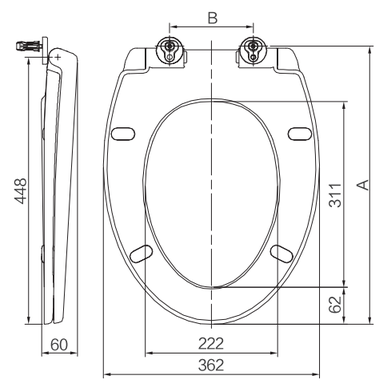

Hinge		Installation size		Coordinate bolts		Softclose	No softclose
Code	Illustration	A	B	Installations way	Code		
I202		448 ± 24	140 ± 48	Top lock	I106	●	
				Bottom lock	I504		
		448 ± 41	140 ± 82	Top lock	I106	●	
				Bottom lock	I504		
I203		448 ± 24	140 ± 48	Top lock	I106		●
				Bottom lock	I504		
		448 ± 41	140 ± 82	Top lock	I106		●
				Bottom lock	I504		

Item Code: I3900/I3900S



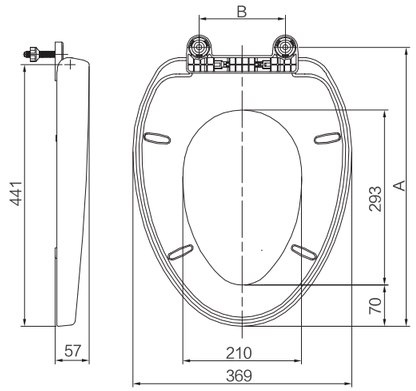

Hinge		Installation size		Coordinate bolts		Softclose	No softclose
Code	Illustration	A	B	Installations way	Code		
1I377		475 ± 4	140	Top lock	I106	●	●
				Bottom lock	I256		
I299		475 ± 3	140 ± 6	Top lock	I106	●	●
				Bottom lock	I504		
		475	140	Bottom lock	I356		
1I185		470 ± 8	145 ± 16	Top lock	I106	●	●
		470 ± 5	145 ± 10	Bottom lock	I260		
I904		441+37/-5	150 ± 20	Top lock	I106	●	●
				Bottom lock	I504		
I902		442.5 ± 8	140/160 ± 16	Top lock	I106	●	●
		442.5 ± 5	140/160 ± 10	Bottom lock	I260		
I908		441+25/0	150 ± 20	Top lock	I106	●	●
				Bottom lock	I504		
I909		441+25/0	150 ± 20	Top lock	I106	●	●
				Bottom lock	I504		
I300		475 ± 3	140 ± 6	Top lock	I106	●	●
				Bottom lock	I504		
		475	140	Top lock	I356		

Item Code: I3060/I3060S



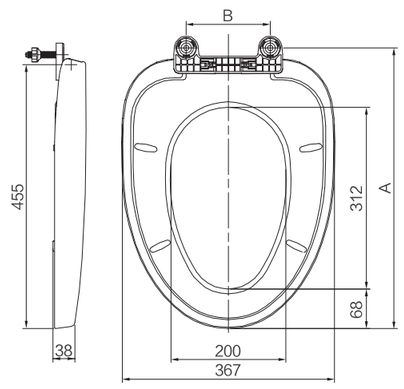

Hinge		Installation size		Coordinate bolts		Softclose	No softclose
Code	Illustration	A	B	Installations way	Code		
1I377		489 ± 4	140	Top lock	I106	●	●
				Bottom lock	I256		
I299		489 ± 3	140 ± 6	Top lock	I106	●	●
				Bottom lock	I504		
		489	140	Bottom lock	I356		
1I185		484 ± 8	145 ± 16	Top lock	I106	●	●
		484 ± 5	145 ± 10	Bottom lock	I260		
I904		455+37/-5	150 ± 20	Top lock	I106	●	●
				Bottom lock	I504		
I902		456.5 ± 8	140/160 ± 16	Top lock	I106	●	●
		456.5 ± 5	140/160 ± 10	Bottom lock	I260		
I908		455+25/0	150 ± 20	Top lock	I106	●	●
				Bottom lock	I504		
I909		455+25/0	150 ± 20	Top lock	I106	●	●
				Bottom lock	I504		
I300		489 ± 3	140 ± 6	Top lock	I106	●	●
				Bottom lock	I504		
		489	140	Top lock	I356		

Item Code: I2200/I2200S



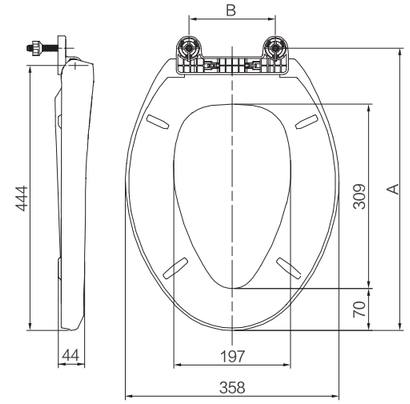

Hinge		Installation size		Coordinate bolts		Softclose	No softclose
Code	Illustration	A	B	Installations way	Code		
1I377		478 ± 4	140	Top lock	I106	●	●
				Bottom lock	I256		
I299		478 ± 3	140 ± 6	Top lock	I106	●	●
				Bottom lock	I504		
		478	140	Bottom lock	I356		
1I185		473 ± 8	145 ± 16	Top lock	I106	●	●
		473 ± 5	145 ± 10	Bottom lock	I260		
I904		444+37/-5	150 ± 20	Top lock	I106	●	●
				Bottom lock	I504		
I902		445.5 ± 8	140/160 ± 16	Top lock	I106	●	●
		445.5 ± 5	140/160 ± 10	Bottom lock	I260		
I908		444+25/0	150 ± 20	Top lock	I106	●	●
				Bottom lock	I504		
I909		444+25/0	150 ± 20	Top lock	I106	●	●
				Bottom lock	I504		
I300		478 ± 3	140 ± 6	Top lock	I106	●	●
				Bottom lock	I504		
		478	140	Top lock	I356		

Item Code: I1518/I1518S



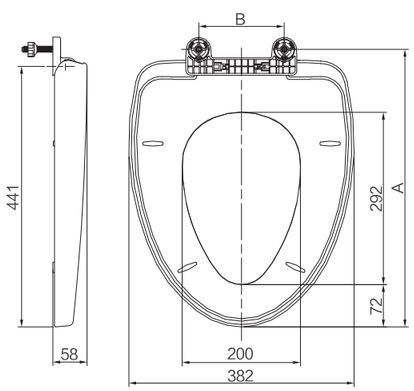

Hinge		Installation size		Coordinate bolts		Softclose	No softclose
Code	Illustration	A	B	Installations way	Code		
1I377		475 ± 4	140	Top lock	I106	●	●
				Bottom lock	I256		
I299		475 ± 3	140 ± 6	Top lock	I106	●	●
				Bottom lock	I504		
		475	140	Bottom lock	I356		
1I185		470 ± 8	145 ± 16	Top lock	I106	●	●
		470 ± 5	145 ± 10	Bottom lock	I260		
I904		441+37/-5	150 ± 20	Top lock	I106	●	●
				Bottom lock	I504		
I902		442.5 ± 8	140/160 ± 16	Top lock	I106	●	●
		442.5 ± 5	140/160 ± 10	Bottom lock	I260		
I908		441+25/0	150 ± 20	Top lock	I106	●	●
				Bottom lock	I504		
I909		441+25/0	150 ± 20	Top lock	I106	●	●
				Bottom lock	I504		
I300		475 ± 3	140 ± 6	Top lock	I106	●	●
				Bottom lock	I504		
		475	140	Top lock	I356		

Item Code: I1508/I1508S/I1508N/I1508NS



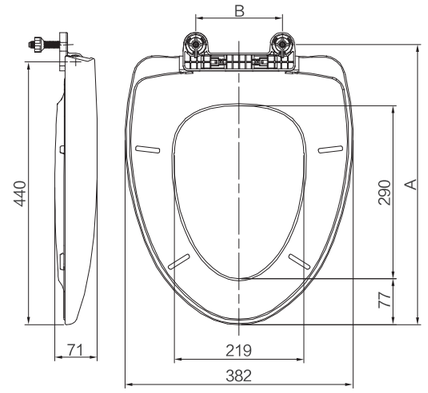

Hinge		Installation size		Coordinate bolts		Softclose	No softclose
Code	Illustration	A	B	Installations way	Code		
1I377		474 ± 4	140	Top lock	I106	●	●
				Bottom lock	I256		
I299		474 ± 3	140 ± 6	Top lock	I106	●	●
				Bottom lock	I504		
		474	140	Bottom lock	I356		
1I185	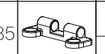	469 ± 8	145 ± 16	Top lock	I106	●	●
		469 ± 5	145 ± 10	Bottom lock	I260		
1I908		440+25/0	150 ± 20	Top lock	I106	●	●
				Bottom lock	I504		
1I909		440+25/0	150 ± 20	Top lock	I106	●	●
				Bottom lock	I504		
I300		474 ± 3	140 ± 6	Top lock	I106	●	●
				Bottom lock	I504		
		474	140	Bottom lock	I356		

Item Code: I1621/I1621S



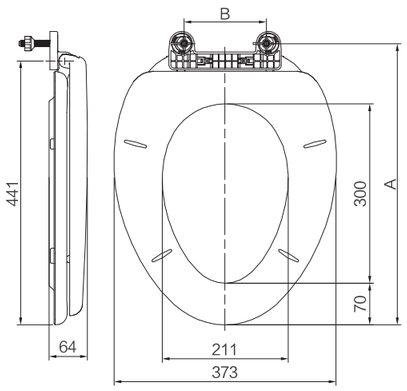

Hinge		Installation size		Coordinate bolts		Softclose	No softclose
Code	Illustration	A	B	Installations way	Code		
1I377		475 ± 4	140	Top lock	I106	●	●
				Bottom lock	I256		
I299		475 ± 3	140 ± 6	Top lock	I106	●	●
				Bottom lock	I504		
		475	140	Bottom lock	I356		
1I185	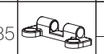	470 ± 8	145 ± 16	Top lock	I106	●	●
		470 ± 5	145 ± 10	Bottom lock	I260		
I908		441+25/0	150 ± 20	Top lock	I106	●	●
				Bottom lock	I504		

Item Code: I1221/I1221S/I1221N/I1221NS



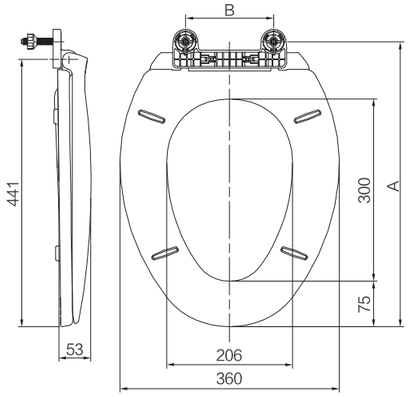

Hinge		Installation size		Coordinate bolts		Softclose	No softclose
Code	Illustration	A	B	Installations way	Code		
1I377		475 ± 4	140	Top lock	I106	●	●
				Bottom lock	I256		
I299		475 ± 3	140 ± 6	Top lock	I106	●	●
				Bottom lock	I504		
		475	140	Bottom lock	I356		
1I185		470 ± 8	145 ± 16	Top lock	I106	●	●
		470 ± 5	145 ± 10	Bottom lock	I260		
1I908		441+25/0	150 ± 20	Top lock	I106	●	●
				Bottom lock	I504		
1I909		441+25/0	150 ± 20	Top lock	I106	●	●
				Bottom lock	I504		
I300		475 ± 3	140 ± 6	Top lock	I106	●	●
				Bottom lock	I504		
		475	140	Bottom lock	I356		

Item Code: I1211/I1211S



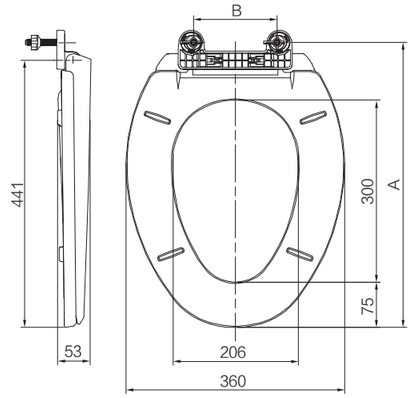

Hinge		Installation size		Coordinate bolts		Softclose	No softclose
Code	Illustration	A	B	Installations way	Code		
1I377		475 ± 4	140	Top lock	I106	●	●
				Bottom lock	I256		
I299		475 ± 3	140 ± 6	Top lock	I106	●	●
				Bottom lock	I504		
		475	140	Bottom lock	I356		
1I185		470 ± 8	145 ± 16	Top lock	I106	●	●
		470 ± 5	145 ± 10	Bottom lock	I260		
1I908		441+25/0	150 ± 20	Top lock	I106	●	●
				Bottom lock	I504		
1I909		441+25/0	150 ± 20	Top lock	I106	●	●
				Bottom lock	I504		
I300		475 ± 3	140 ± 6	Top lock	I106	●	●
				Bottom lock	I504		
		475	140	Bottom lock	I356		

Item Code: I1201/I1201S



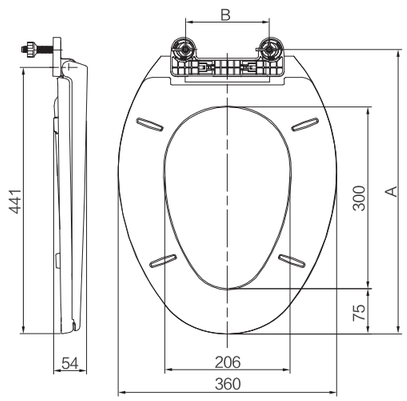

Hinge		Installation size		Coordinate bolts		Softclose	No softclose
Code	Illustration	A	B	Installations way	Code		
1I377		475 ± 4	140	Top lock	I106	●	●
				Bottom lock	I256		
I299		475 ± 3	140 ± 6	Top lock	I106	●	●
				Bottom lock	I504		
		475	140	Bottom lock	I356		
1I185		470 ± 8	145 ± 16	Top lock	I106	●	●
		470 ± 5	145 ± 10	Bottom lock	I260		
1I908		441+25/0	150 ± 20	Top lock	I106	●	●
				Bottom lock	I504		
1I909		441+25/0	150 ± 20	Top lock	I106	●	●
				Bottom lock	I504		
I300		475 ± 3	140 ± 6	Top lock	I106	●	●
				Bottom lock	I504		
		475	140	Bottom lock	I356		

Item Code: I2560



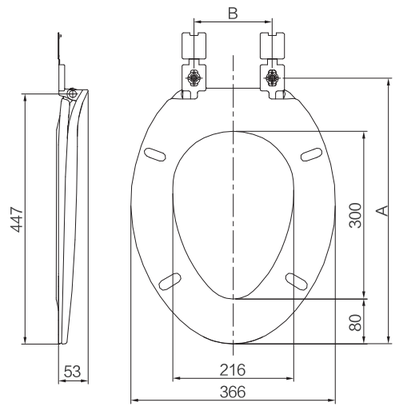

Hinge		Installation size		Coordinate bolts		Softclose	No softclose
Code	Illustration	A	B	Installations way	Code		
1I1183-A		475 ± 9	140 ± 3	Bottom lock	I165		●
1I1183-B		475 ± 8	140 ± 16	Top lock	I106		●
		475 ± 5	140 ± 10	Bottom lock	I260		
1I1049		470	140 ± 18	Bottom lock	I165		●
1I1119		478 ± 10	150 ± 20	Bottom lock	I165		●

Item Code: I2190/I2190S



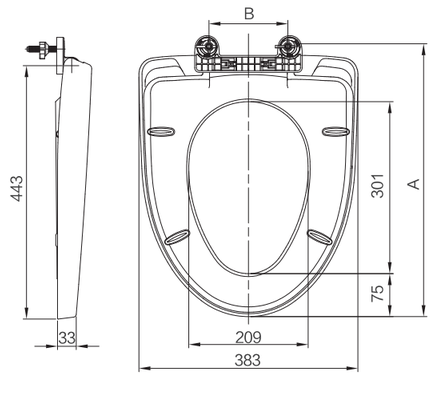

Hinge		Installation size		Coordinate bolts		Softclose	No softclose
Code	Illustration	A	B	Installations way	Code		
1I377		477 ± 4	140	Top lock	I106	●	●
				Bottom lock	I256		
I299		477 ± 3	140 ± 6	Top lock	I106	●	●
				Bottom lock	I504		
		477	140	Bottom lock	I356		
1I185		472 ± 8	145 ± 16	Top lock	I106	●	●
		472 ± 5	145 ± 10	Bottom lock	I260		
I904		443+37/-5	150 ± 20	Top lock	I106	●	●
				Bottom lock	I504		
I902		444.5 ± 8	140/160 ± 16	Top lock	I106	●	●
		444.5 ± 5	140/160 ± 10	Bottom lock	I260		
I908		443+25/0	150 ± 20	Top lock	I106	●	●
				Bottom lock	I504		
I909		443+25/0	150 ± 20	Top lock	I106	●	●
				Bottom lock	I504		
I300		477 ± 3	140 ± 6	Top lock	I106	●	●
				Bottom lock	I504		
		477	140	Bottom lock	I356		

Item Code: I1224/I1224S



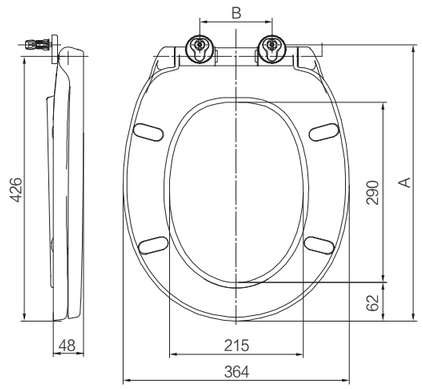

Hinge		Installation size		Coordinate bolts		Softclose	No softclose
Code	Illustration	A	B	Installations way	Code		
I202		426 ± 24	116 ± 48	Top lock	I106	●	
				Bottom lock	I504		
		426 ± 41	116 ± 82	Top lock	I106	●	
				Bottom lock	I504		
I203		426 ± 24	116 ± 48	Top lock	I106		●
				Bottom lock	I504		
		426 ± 41	116 ± 82	Top lock	I106		●
				Bottom lock	I504		

Item Code: I1500/I1500S/I1500N/I1500NS



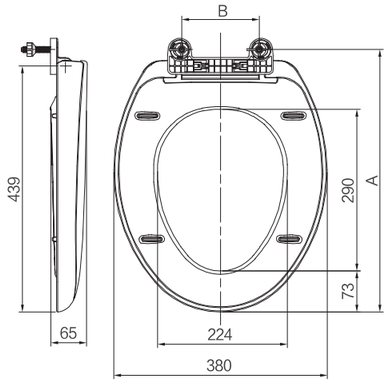

Hinge		Installation size		Coordinate bolts		Softclose	No softclose
Code	Illustration	A	B	Installations way	Code		
1I377		473 ± 4	140	Top lock	I106	●	●
				Bottom lock	I256		
I299		473 ± 3	140 ± 6	Top lock	I106	●	●
				Bottom lock	I504		
		473	140	Bottom lock	I356		
1I185		468 ± 8	145 ± 16	Top lock	I106	●	●
		468 ± 5	145 ± 10	Bottom lock	I260		
I904		439+37/-5	150 ± 20	Top lock	I106	●	●
				Bottom lock	I504		
I902		440.5 ± 8	140/160 ± 16	Top lock	I106	●	●
		440.5 ± 5	140/160 ± 10	Bottom lock	I260		
I908		439+25/0	150 ± 20	Top lock	I106	●	●
				Bottom lock	I504		
I909		439+25/0	150 ± 20	Top lock	I106	●	●
				Bottom lock	I504		
I300		473 ± 3	140 ± 6	Top lock	I106	●	●
				Bottom lock	I504		
		473	140	Bottom lock	I356		

Item Code: I1220/I1220S



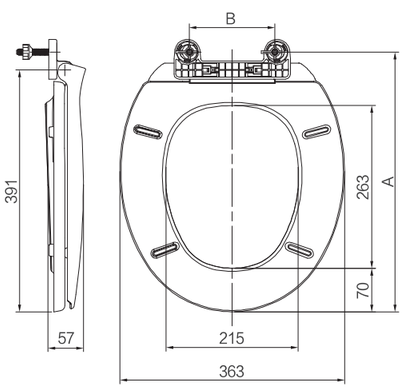

Hinge		Installation size		Coordinate bolts		Softclose	No softclose
Code	Illustration	A	B	Installations way	Code		
1I377		425 ± 4	140	Top lock	I106	●	●
				Bottom lock	I256		
I299		425 ± 3	140 ± 6	Top lock	I106	●	●
				Bottom lock	I504		
		425	140	Bottom lock	I356		
1I185		420 ± 8	145 ± 16	Top lock	I106	●	●
		420 ± 5	145 ± 10	Bottom lock	I260		
I908		391+25/0	150 ± 20	Top lock	I106	●	●
				Bottom lock	I504		
I909		391+25/0	150 ± 20	Top lock	I106	●	●
				Bottom lock	I504		
I300		425 ± 3	140 ± 6	Top lock	I106	●	●
				Bottom lock	I504		
		425	140	Bottom lock	I356		

Item Code: I1210/I1210S



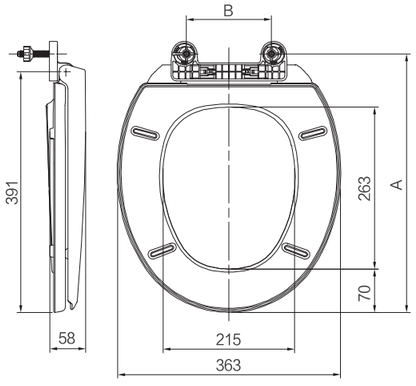

Hinge		Installation size		Coordinate bolts		Softclose	No softclose
Code	Illustration	A	B	Installations way	Code		
1I377		425 ± 4	140	Top lock	I106	●	●
				Bottom lock	I256		
I299		425 ± 3	140 ± 6	Top lock	I106	●	●
				Bottom lock	I504		
		425	140	Bottom lock	I356		
1I185		420 ± 8	145 ± 16	Top lock	I106	●	●
		420 ± 5	145 ± 10	Bottom lock	I260		
I908		391+25/0	150 ± 20	Top lock	I106	●	●
				Bottom lock	I504		
I909		391+25/0	150 ± 20	Top lock	I106	●	●
				Bottom lock	I504		
I300		425 ± 3	140 ± 6	Top lock	I106	●	●
				Bottom lock	I504		
		425	140	Bottom lock	I356		

Item Code: I1200/I1200S



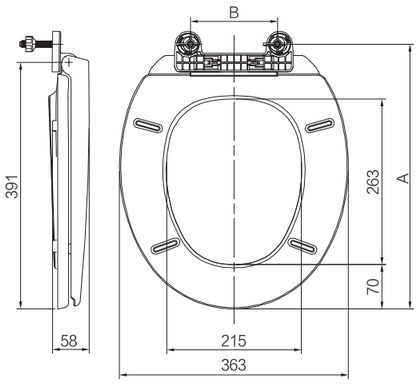

Hinge		Installation size		Coordinate bolts		Softclose	No softclose
Code	Illustration	A	B	Installations way	Code		
1I377		425 ± 4	140	Top lock	I106	●	●
				Bottom lock	I256		
I299		425 ± 3	140 ± 6	Top lock	I106	●	●
				Bottom lock	I504		
		425	140	Bottom lock	I356		
1I185		420 ± 8	145 ± 16	Top lock	I106	●	●
		420 ± 5	145 ± 10	Bottom lock	I260		
I908		391+25/0	150 ± 20	Top lock	I106	●	●
				Bottom lock	I504		
I909		391+25/0	150 ± 20	Top lock	I106	●	●
				Bottom lock	I504		
I300		425 ± 3	140 ± 6	Top lock	I106	●	●
				Bottom lock	I504		
		425	140	Bottom lock	I356		

Item Code: I1606/I1606S



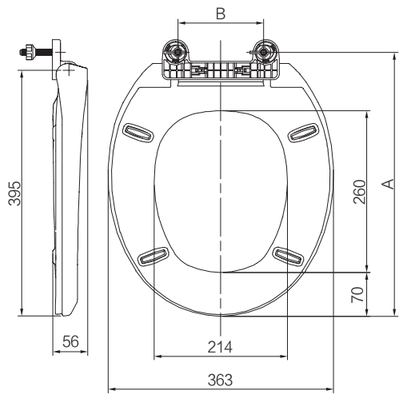

Item Code: I3901/I3901S



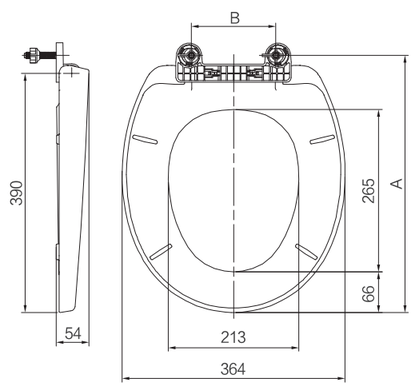

Hinge		Installation size		Coordinate bolts		Softclose	No softclose
Code	Illustration	A	B	Installations way	Code		
I1377		429 ± 4	140	Top lock	I106	●	●
				Bottom lock	I256		
I299		429 ± 3	140 ± 6	Top lock	I106	●	●
				Bottom lock	I504		
		429	140	Bottom lock	I356		
I1185		424 ± 8	145 ± 16	Top lock	I106	●	●
		424 ± 5	145 ± 10	Bottom lock	I260		
I904		395+37/-5	150 ± 20	Top lock	I106	●	●
				Bottom lock	I504		
I902		396.5 ± 8	140/160 ± 16	Top lock	I106	●	●
		396.5 ± 5	140/160 ± 10	Bottom lock	I260		
I908		395+25/0	150 ± 20	Top lock	I106	●	●
				Bottom lock	I504		
I909		395+25/0	150 ± 20	Top lock	I106	●	●
				Bottom lock	I504		
I300		429 ± 3	140 ± 6	Top lock	I106	●	●
				Bottom lock	I504		
		429	140	Bottom lock	I356		

Hinge		Installation size		Coordinate bolts		Softclose	No softclose
Code	Illustration	A	B	Installations way	Code		
I1377		424 ± 4	140	Top lock	I106	●	●
				Bottom lock	I256		
I299		424 ± 3	140 ± 6	Top lock	I106	●	●
				Bottom lock	I504		
		424	140	Bottom lock	I356		
I1185		419 ± 8	145 ± 16	Top lock	I106	●	●
		419 ± 5	145 ± 10	Bottom lock	I260		
I904		390+37/-5	150 ± 20	Top lock	I106	●	●
				Bottom lock	I504		
I902		391.5 ± 8	140/160 ± 16	Top lock	I106	●	●
		391.5 ± 5	140/160 ± 10	Bottom lock	I260		
I908		390+25/0	150 ± 20	Top lock	I106	●	●
				Bottom lock	I504		
I909		390+25/0	150 ± 20	Top lock	I106	●	●
				Bottom lock	I504		
I300		424 ± 3	140 ± 6	Top lock	I106	●	●
				Bottom lock	I504		
		424	140	Bottom lock	I356		

Item Code: I2550



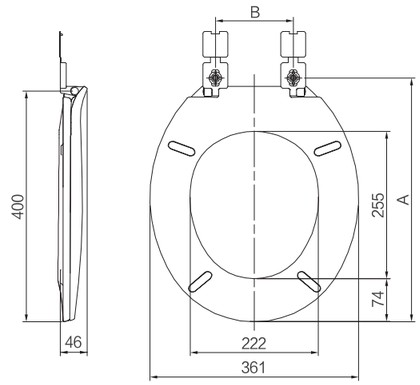

Item Code: I1606K/I1606KS



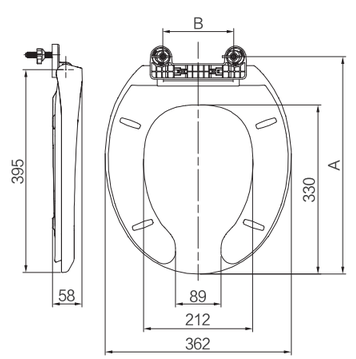

Hinge		Installation size		Coordinate bolts		Softclose	No softclose
Code	Illustration	A	B	Installations way	Code		
I1183-A		427 ± 9	135 ± 3	Bottom lock	I165		●
I1183-B		427 ± 8	135 ± 16	Top lock	I106		●
		427 ± 5	135 ± 10	Bottom lock	I260		
I1049		422	135 ± 18	Bottom lock	I165		●
I1119		430 ± 10	145 ± 20	Bottom lock	I165		●

Hinge		Installation size		Coordinate bolts		Softclose	No softclose
Code	Illustration	A	B	Installations way	Code		
I1377		429 ± 4	140	Top lock	I106	●	●
				Bottom lock	I256		
I299		429 ± 3	140 ± 6	Top lock	I106	●	●
				Bottom lock	I504		
		429	140	Bottom lock	I356		
I1185		424 ± 8	145 ± 16	Top lock	I106	●	●
		424 ± 5	145 ± 10	Bottom lock	I260		
I904		395+37/-5	150 ± 20	Top lock	I106	●	●
				Bottom lock	I504		
I902		396.5 ± 8	140/160 ± 16	Top lock	I106	●	●
		396.5 ± 5	140/160 ± 10	Bottom lock	I260		
I908		395+25/0	150 ± 20	Top lock	I106	●	●
				Bottom lock	I504		
I909		395+25/0	150 ± 20	Top lock	I106	●	●
				Bottom lock	I504		
I300		429 ± 3	140 ± 6	Top lock	I106	●	●
				Bottom lock	I504		
		429	140	Bottom lock	I356		

Item Code: I2200K/I2200KS



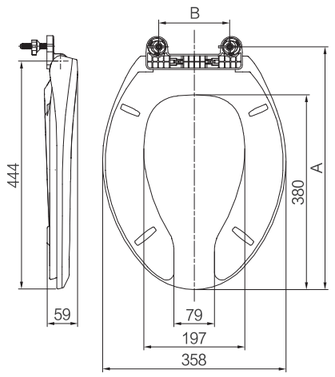

Hinge		Installation size		Coordinate bolts		Softclose	No softclose
Code	Illustration	A	B	Installations way	Code		
11377		478 ± 4	140	Top lock	I106	●	●
				Bottom lock	I256		
I299		478 ± 3	140 ± 6	Top lock	I106	●	●
				Bottom lock	I504		
		478	140	Bottom lock	I356		
11185		473 ± 8	145 ± 16	Top lock	I106	●	●
		473 ± 5	145 ± 10	Bottom lock	I260		
I904		444+37/-5	150 ± 20	Top lock	I106	●	●
				Bottom lock	I504		
I902		445.5 ± 8	140/160 ± 16	Top lock	I106	●	●
		445.5 ± 5	140/160 ± 10	Bottom lock	I260		
I908		444+25/0	150 ± 20	Top lock	I106	●	●
				Bottom lock	I504		
I909		444+25/0	150 ± 20	Top lock	I106	●	●
				Bottom lock	I504		
I300		429 ± 3	140 ± 6	Top lock	I106		
				Bottom lock	I504	●	●
		429	140	Bottom lock	I356		

Item Code: I2090/I2090D



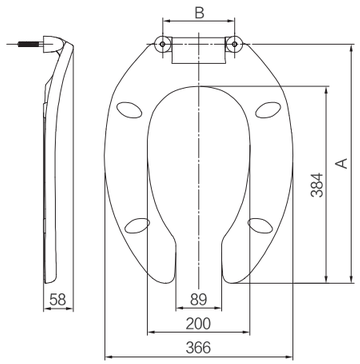

Hinge		Installation size		Coordinate bolts		Softclose	No softclose
Code	Illustration	A	B	Installations way	Code		
11386-A		468	140	Bottom lock	270201		●
					270200		
11386-B		468	140		212070		●

Item Code: I1694S



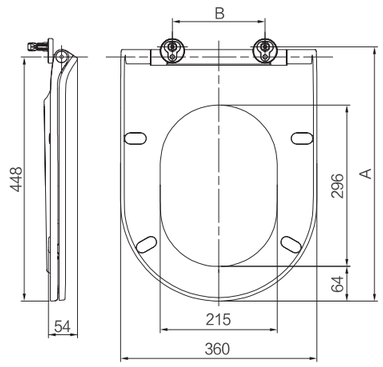

Hinge		Installation size		Coordinate bolts		Softclose	No softclose
Code	Illustration	A	B	Installations way	Code		
I205		448 ± 24	170 ± 48	Top lock	I106	●	
				Bottom lock	I504		
		448 ± 41	170 ± 82	Top lock	I106	●	
				Bottom lock	I504		

Item Code: I1693/I1693S



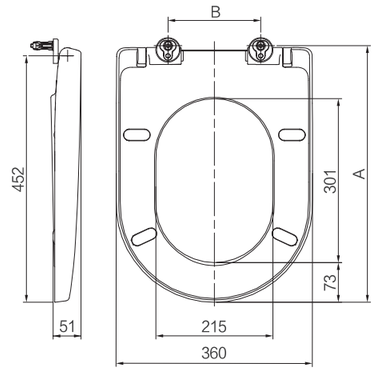

Hinge		Installation size		Coordinate bolts		Softclose	No softclose
Code	Illustration	A	B	Installations way	Code		
I202		452 ± 24	170 ± 48	Top lock	I106	●	
				Bottom lock	I504		
		452 ± 41	170 ± 82	Top lock	I106	●	
				Bottom lock	I504		
I203		452 ± 24	170 ± 48	Top lock	I106		●
				Bottom lock	I504		
		452 ± 41	170 ± 82	Top lock	I106		●
				Bottom lock	I504		

Item Code: I1695/I1695S



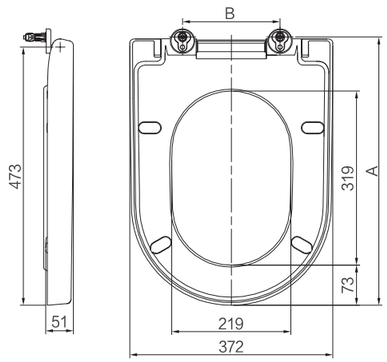

Hinge		Installation size		Coordinate bolts		Softclose	No softclose
Code	Illustration	A	B	Installations way	Code		
I202		473 ± 24	177 ± 48	Top lock	I106	●	
				Bottom lock	I504		
		473 ± 41	177 ± 82	Top lock	I106	●	
				Bottom lock	I504		
I203		473 ± 24	177 ± 48	Top lock	I106		●
				Bottom lock	I504		
		473 ± 41	177 ± 82	Top lock	I106		●
				Bottom lock	I504		

Item Code: I1690/I1690S



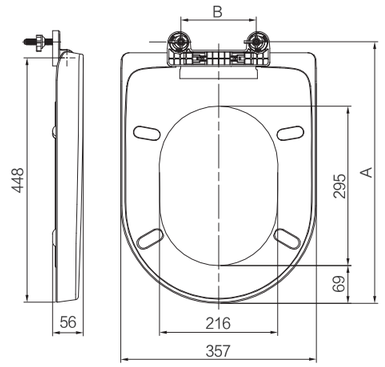

Hinge		Installation size		Coordinate bolts		Softclose	No softclose
Code	Illustration	A	B	Installations way	Code		
I1377		482 ± 4	140	Top lock	I106	●	●
				Bottom lock	I256		
I299		482 ± 3	140 ± 6	Top lock	I106	●	●
				Bottom lock	I504		
		482	140	Bottom lock	I356		
I1185		477 ± 8	145 ± 16	Top lock	I106	●	●
		477 ± 5	145 ± 10	Bottom lock	I260		
I904		448+37/-5	150 ± 20	Top lock	I106	●	●
				Bottom lock	I504		
I902		449.5 ± 8	140/160 ± 16	Top lock	I106	●	●
		449.5 ± 5	140/160 ± 10	Bottom lock	I260		
I908		448+25/0	150 ± 20	Top lock	I106	●	●
				Bottom lock	I504		
I909		448+25/0	150 ± 20	Top lock	I106	●	●
				Bottom lock	I504		
I300		482 ± 3	140 ± 6	Top lock	I106	●	●
				Bottom lock	I504		
		482	140	Bottom lock	I356		

Item Code: I1691/I1691S



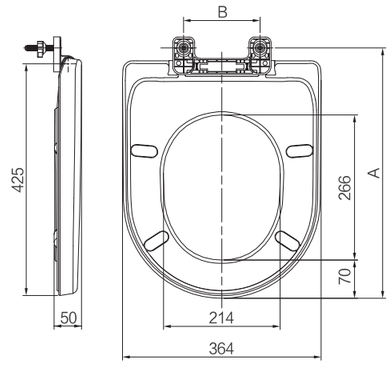

Hinge		Installation size		Coordinate bolts		Softclose	No softclose
Code	Illustration	A	B	Installations way	Code		
I1377		459 ± 4	140	Top lock	I106	●	●
				Bottom lock	I256		
I299		459 ± 3	140 ± 6	Top lock	I106	●	●
				Bottom lock	I504		
		459	140	Bottom lock	I356		
I1185		454 ± 8	145 ± 16	Top lock	I106	●	●
		454 ± 5	145 ± 10	Bottom lock	I260		
I904		425+37/-5	150 ± 20	Top lock	I106	●	●
				Bottom lock	I504		
I902		426.5 ± 8	140/160 ± 16	Top lock	I106	●	●
		426.5 ± 5	140/160 ± 10	Bottom lock	I260		
I908	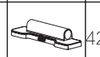	425+25/0	150 ± 20	Top lock	I106	●	●
				Bottom lock	I504		
I300		459 ± 3	140 ± 6	Top lock	I106	●	●
				Bottom lock	I504		
		459	140	Bottom lock	I356		

Item Code: I1692/I1692S



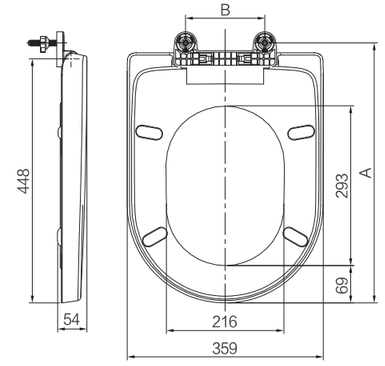

Hinge		Installation size		Coordinate bolts		Softclose	No softclose
Code	Illustration	A	B	Installations way	Code		
I1377		482 ± 4	140	Top lock	I106	●	●
				Bottom lock	I256		
I299		482 ± 3	140 ± 6	Top lock	I106	●	●
				Bottom lock	I504		
		482	140	Bottom lock	I356		
I1185		477 ± 8	145 ± 16	Top lock	I106	●	●
		477 ± 5	145 ± 10	Bottom lock	I260		
I904		448+37/-5	150 ± 20	Top lock	I106	●	●
				Bottom lock	I504		
I902		449.5 ± 8	140/160 ± 16	Top lock	I106	●	●
		449.5 ± 5	140/160 ± 10	Bottom lock	I260		
I908		448+25/0	150 ± 20	Top lock	I106	●	●
				Bottom lock	I504		
I909		448+25/0	150 ± 20	Top lock	I106	●	●
				Bottom lock	I504		
I300		482 ± 3	140 ± 6	Top lock	I106	●	●
				Bottom lock	I504		
		482	140	Bottom lock	I356		

Item Code: I2280/I2280S



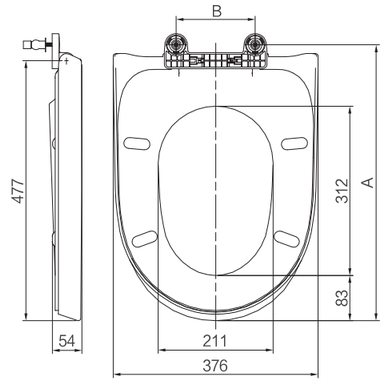

Hinge		Installation size		Coordinate bolts		Softclose	No softclose
Code	Illustration	A	B	Installations way	Code		
11377		511 ± 4	140	Top lock	I106	●	●
				Bottom lock	I256		
I299		511 ± 3	140 ± 6	Top lock	I106	●	●
				Bottom lock	I504		
		511	140	Bottom lock	I356		
11185		506 ± 8	145 ± 16	Top lock	I106	●	●
		506 ± 5	145 ± 10	Bottom lock	I260		
I904		477+37/-5	150 ± 20	Top lock	I106	●	●
				Bottom lock	I504		
I902		478.5 ± 8	140/160 ± 16	Top lock	I106	●	●
		478.5 ± 5	140/160 ± 10	Bottom lock	I260		
I908		477+25/0	150 ± 20	Top lock	I106	●	●
				Bottom lock	I504		
I300		511 ± 3	140 ± 6	Top lock	I106	●	●
				Bottom lock	I504		
		511	140	Bottom lock	I356		

Item Code: U5061/U5061S



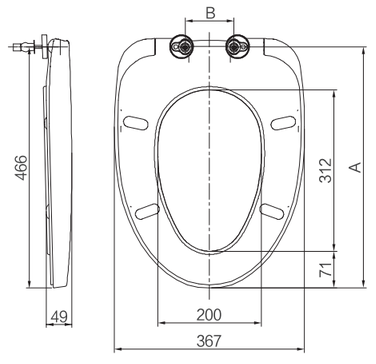

Hinge		Installation size		Coordinate bolts		Softclose	No softclose
Code	Illustration	A	B	Installations way	Code		
P212		467 ± 24	132 ± 48	Top lock	I106		●
				Bottom lock	I504		●
P202				Top lock	I106	●	
				Bottom lock	I504	●	
P400				Top lock	I106	●	
				Bottom lock	I504	●	

Item Code: U5310/U5310S



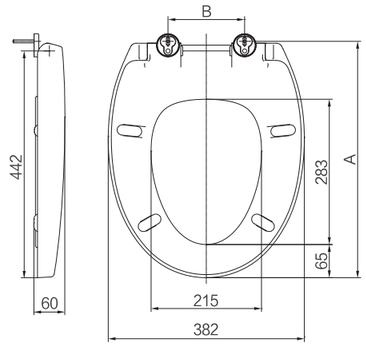

Hinge		Installation size		Coordinate bolts		Softclose	No softclose
Code	Illustration	A	B	Installations way	Code		
P212		442 ± 24	148 ± 48	Top lock	I106		●
				Bottom lock	I504		●
P202				Top lock	I106	●	
				Bottom lock	I504	●	
P400				Top lock	I106	●	
				Bottom lock	I504	●	

Item Code: U5850/U5850S

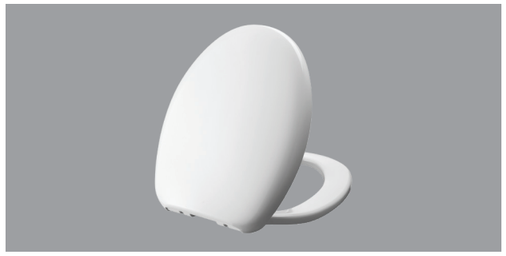

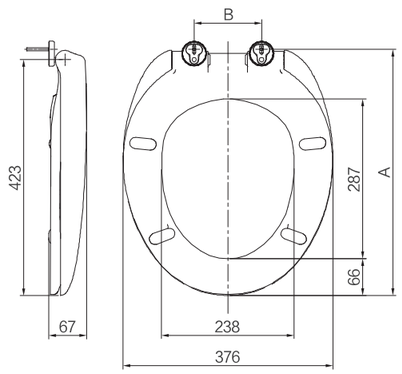

Hinge		Installation size		Coordinate bolts		Softclose	No softclose
Code	Illustration	A	B	Installations way	Code		
P212		423 ± 24	121 ± 48	Top lock	I106		●
				Bottom lock	I504		●
P202				Top lock	I106	●	
				Bottom lock	I504	●	
P400				Top lock	I106	●	
				Bottom lock	I504	●	

Item Code: U5820/U5820S



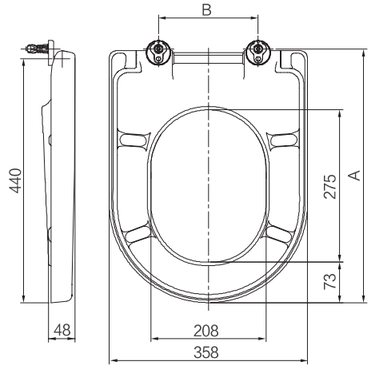

Hinge		Installation size		Coordinate bolts		Softclose	No softclose
Code	Illustration	A	B	Installations way	Code		
P212		440 ± 24	180 ± 48	Top lock	I106		●
				Bottom lock	I504		●
P202				Top lock	I106	●	
				Bottom lock	I504	●	
P400				Top lock	I106	●	
				Bottom lock	I504	●	

Item Code: U7030/U7030S



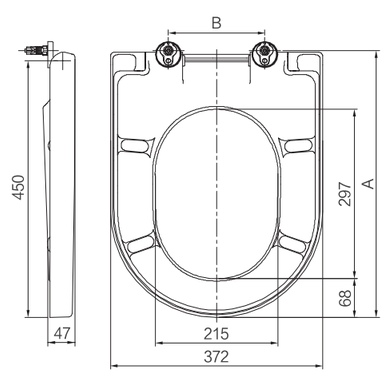

Hinge		Installation size		Coordinate bolts		Softclose	No softclose
Code	Illustration	A	B	Installations way	Code		
P212		450 ± 24	169 ± 48	Top lock	I106		●
				Bottom lock	I504		●
P202				Top lock	I106	●	
				Bottom lock	I504	●	
P400				Top lock	I106	●	
				Bottom lock	I504	●	

Item Code: U7080/U7080S



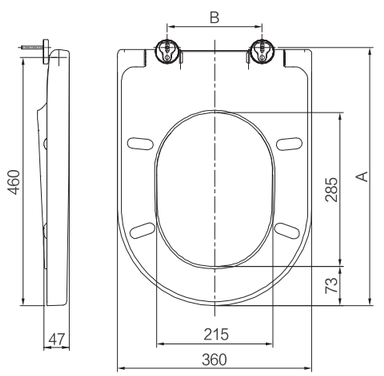

Hinge		Installation size		Coordinate bolts		Softclose	No softclose
Code	Illustration	A	B	Installations way	Code		
P212		460 ± 24	176 ± 48	Top lock	I106		●
				Bottom lock	I504		●
P202				Top lock	I106	●	
				Bottom lock	I504	●	
P400				Top lock	I106	●	
				Bottom lock	I504	●	

Item Code: U7270/U7270S

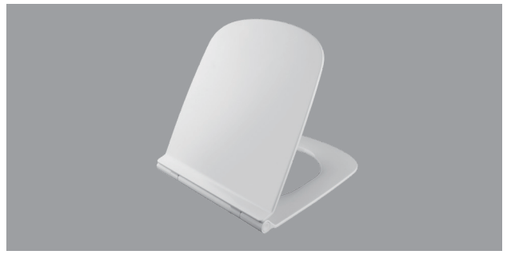

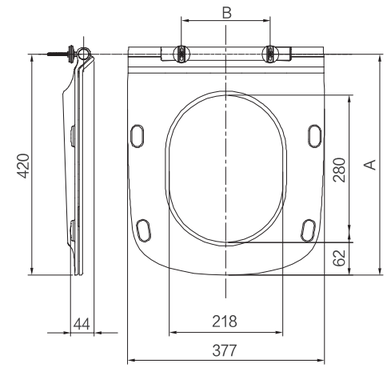

Hinge		Installation size		Coordinate bolts		Softclose	No softclose
Code	Illustration	A	B	Installations way	Code		
P402		420 ± 24	170 ± 48	Top lock	I106	●	
			155 ± 48	Top lock	I106		
P401		420	170	Top lock	211300, 212004-1	●	
			155				

Item Code: U9010/U9010S



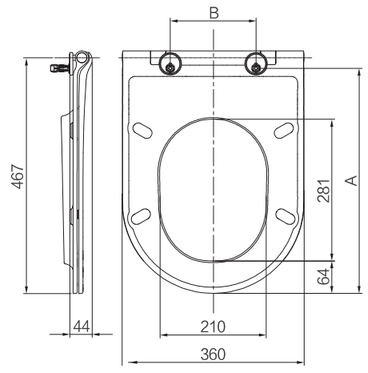

Hinge		Installation size		Coordinate bolts		Softclose	No softclose
Code	Illustration	A	B	Installations way	Code		
P400		467 ± 24	170 ± 48	Top lock	I106	●	
P402			155 ± 48	Top lock	I106	●	
P401		467	170 155	Top lock	211300, 212004-1	●	

Item Code: U9040S



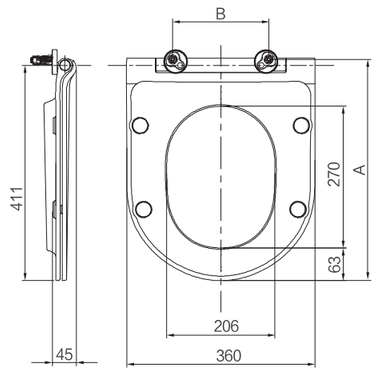

Hinge		Installation size		Coordinate bolts		Softclose	No softclose
Code	Illustration	A	B	Installations way	Code		
P400		411 ± 24	155 ± 48	Top lock	I106	●	
P401		411	155	Top lock	211300, 212004-1	●	
P402		411 ± 24	155 ± 48	Top lock	211454+ 270168+ 212052-2C	●	

Item Code: U7280/U7280S



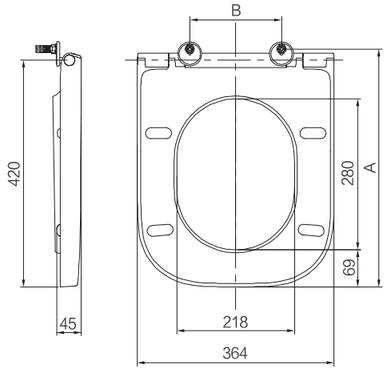

Hinge		Installation size		Coordinate bolts		Softclose	No softclose
Code	Illustration	A	B	Installations way	Code		
P400		420 ± 24	170 ± 48	Top lock	I106	●	
P402				Top lock	I106	●	
P401		420	170	Top lock	211300, 212004-1	●	

PVC 260056-reinforced Hose



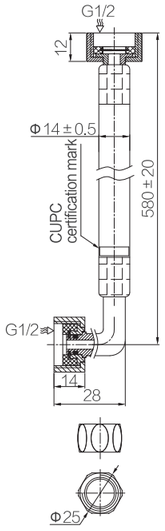

Application

- For water supply connection
- CUPC certification provided for the U.S. market

Characteristics

- Chrome brass angle stop valve
- Chrome brass nut G1/2
- PVC hose
- 60-mesh filter provided

Coding information

Item code	Description
260056-4	PVC soft hose, screw thread G1/2, length=580±20mm

PVC 260114-reinforced Hose



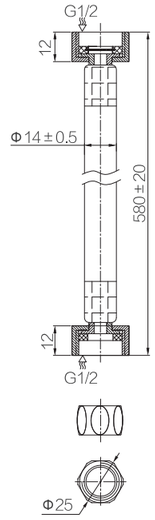

Application

- For water supply connection

Characteristics

- Chrome brass angle stop valve
- Chrome brass screw nut G1/2
- PVC soft pipe
- 60-mesh filter provided

Coding information

Item code	Description
260114	PVC soft hose, screw thread G1/2, length=580±20mm

PVC 260056-11-reinforced Hose



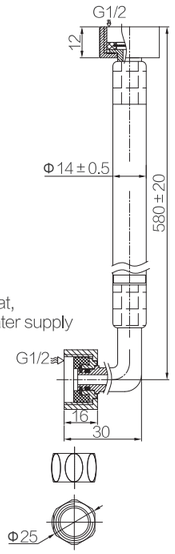

Application

- For bidet seat and intelligent toilet seat, the water inlet is connected to the water supply
- CUPC certified for the US market

Characteristics

- Chrome brass angle stop valve
- Chrome brass screw nut G1/2
- PVC soft pipe
- 80-mesh filter provided

Coding information

Item code	Description
260056-11	PVC soft hose, screw thread G1/2, length=580±20m

PVC 260115-reinforced Hose



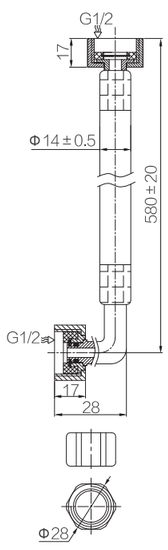

Application

- For water supply connection

Characteristics

- Pom angle stop valve
- Pom brass screw nut G1/2
- PVC soft pipe
- 60-mesh filter provided

Coding information

Item code	Description
260115	PVC soft hose, screw thread G1/2, length=580±20m

PVC 260116-reinforced Hose



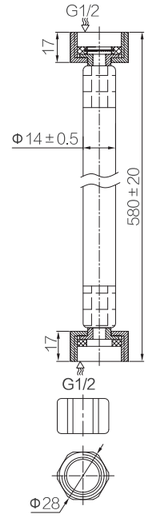

Application

- For water supply connection

Characteristics

- Chrome brass angle stop valve
- POM screw nut G1/2
- PVC soft pipe
- 60-mesh filter provided

Coding information

Item code	Description
260116	PVC soft hose, screw thread G1/2, length=580±20mm

Stainless Steel 260122-reinforced Hose



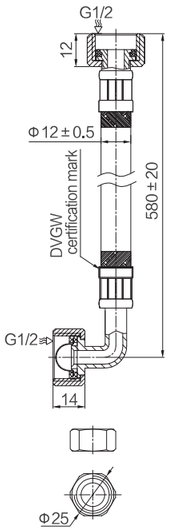

Application

- For water supply connection
- DVGW certification provided for European market

Characteristics

- Chrome brass angle stop valve
- Chrome brass screw nut G1/2
- Stainless steel soft pipe
- 60-mesh filter provided

Coding information

Item code	Description
260122	Stainless steel soft hose, screw thread G1/2, length=580±20mm

Stainless Steel 260121-reinforced Hose



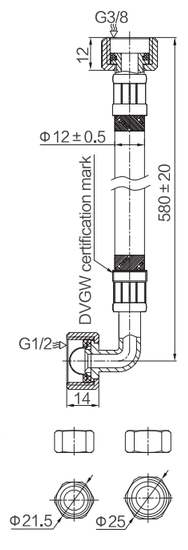

Application

- For water supply connection
- DVGW certification provided for European market

Characteristics

- Chrome brass angle stop valve
- Chrome brass screw nut G1/2 & G3/8
- Stainless steel soft pipe
- 60-mesh filter provided

Coding information

Item code	Description
260121	Stainless steel soft hose, screw thread G1/2&G3/8, length=580±20mm

PVC 260136-reinforced Hose



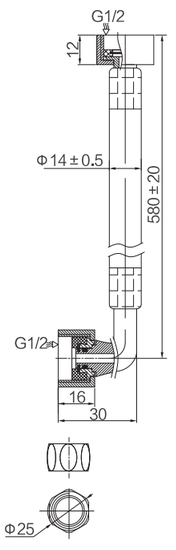

Application

- For water supply connection

Characteristics

- Chrome brass angle stop valve
- Chrome brass screw nut G1/2
- Stainless steel soft pipe
- 60-mesh filter provided

Coding information

Item code	Description
260136	PVC soft hose, screw thread G1/2, length=580±20mm

Stainless Steel 260126-reinforced Hose



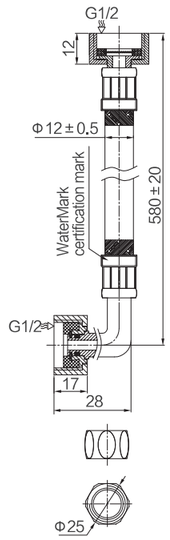

Application

- For water supply connection
- WaterMark certification provided for Australia market

Characteristics

- Chrome brass angle stop valve
- Chrome brass screw nut G1/2
- Stainless steel soft pipe
- 60-mesh filter provided

Coding information

Item code	Description
260126	Stainless steel soft hose, screw thread G1/2, length=580±20mm

Stainless Steel 260126-1-reinforced Hose



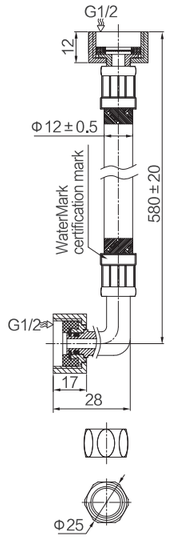

Application

- For water supply connection

Characteristics

- Chrome brass angle stop valve
- Chrome brass screw nut G1/2
- Stainless steel soft pipe
- 60-mesh filter provided

Coding information

Item code	Description
260126-1	Stainless steel soft hose, screw thread G1/2, length=250±20mm

Three-way Pipe F90001



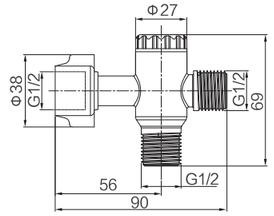

Application

- For separating water into different pipes

Characteristics

- Screw nut G1/2, connection G1/2
- PP+GF material
- 80-mesh filter provided

Coding information

Item code	Description
F90001-1001	Three-way pipe

Three-way Pipe F90056



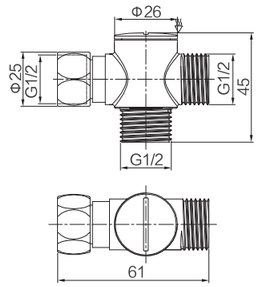

Application

- For separating water into different pipes

Characteristics

- Screw nut G1/2, connection G1/2
- Nickelage brass material
- 80-mesh filter provided
- Reach the requirements of RoHs and REACH

Coding information

Item code	Description
F90056-1001	Three-way pipe

Three-way Pipe F90030



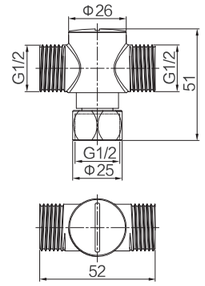

Application

- For separating water into different pipes

Characteristics

- Screw nut G1/2, connection G1/2
- Chrome brass material
- 80-mesh filter provided
- Reach the requirements of RoHs and REACH

Coding information

Item code	Description
F90030-1001	Three-way pipe

Three-way Pipe F90030



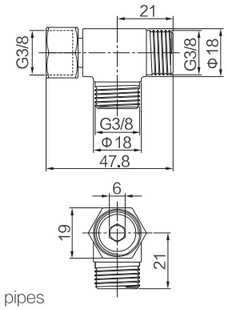

Application

· For separating water into different pipes

Characteristics

· Screw nut G3/8, connection G3/8
· Nickelage brass material
· No filter provided
· Reach the requirements of RoHs and REACH

Coding information

Item code	Description
F90030-1004	Three-way pipe

Inlet Connection 1F150-AO



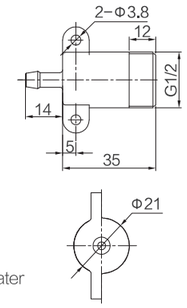

Application

· For connecting the bidet seat to water

Characteristics

· POM material
· G1/2

Coding information

Item code	Description
1F150-AO	POM inlet connection G1/2

Three-way Pipe F90121



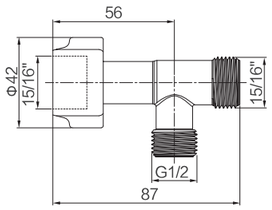

Application

· For separating water into different pipes

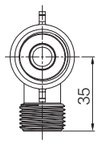

Characteristics

· Screw nut 15/16", connection G1/2X15/16"
· PP+GF material

Coding information

Item code	Description
F90121-1001	Three-way pipe

Inlet Connection 260120



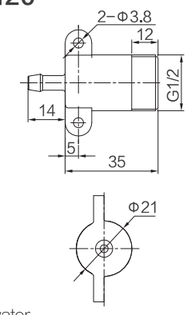

Application

· For connecting the bidet seat to water

Characteristics

· Brass material
· G1/2

Coding information

Item code	Description
260120	POM inlet connection G1/2

Toilet Seat Bolts I106



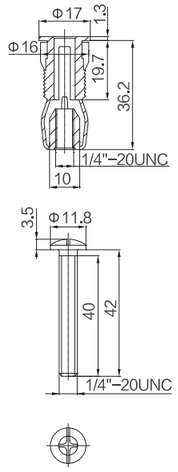

Application

· For matching toilet seat hinge and ceramic hole (top lock)

Characteristics

· Stainless steel G1/4" bolts
· PA screw nut

Coding information

Item code	Description
I106-YYB1	PA top lock

Toilet Seat Bolts I150



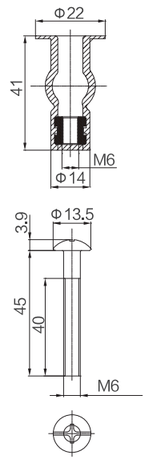

Application

· For matching toilet seat hinge and ceramic hole (top lock)

Characteristics

· Stainless steel "+" bolts
· Rubber inflation

Coding information

Item code	Description
I150-YYB1	Rubber inflation top lock

Toilet Seat Bolts I107



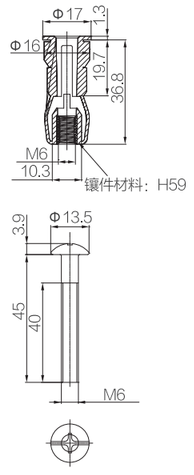

Application

· For matching toilet seat hinge and ceramic hole (top lock)

Characteristics

· Stainless steel "+" bolts (M6)
· PA screw nut
· Expension anchor with M6 copper nut

Coding information

Item code	Description
I107-YYB1	PA top lock

Toilet Seat Bolts I158



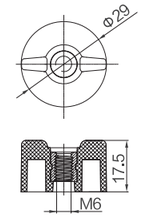

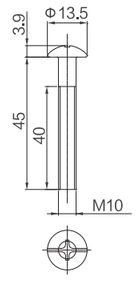

Application

· For matching toilet seat hinge and ceramic hole (bottom lock)

Characteristics

· SS crosshead bolt
· Plastic PP+GF nut
· M6 copper insert nut

Coding information

Item code	Description
I158-YYB1	Bolts(M6) bottom lock

Toilet Seat Bolts I290



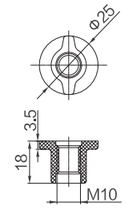

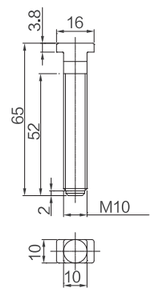

Application

· For matching toilet seat hinge and ceramic hole (bottom lock)

Characteristics

· POM bolts
· POM screw nuts
· For matching I356/I256/I260

Coding information

Item code	Description
I290-YYB1	POM bolts(M10) bottom lock

Toilet Seat Bolts I256



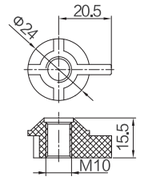

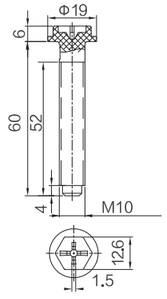

Application

· For matching toilet seat hinge and ceramic hole (bottom lock)

Characteristics

· POM bolts
· POM screw nuts
· For matching I356/I256/I290

Coding information

Item code	Description
I256-YYB1	POM bolts(M10) bottom lock

Toilet Seat Bolts I356



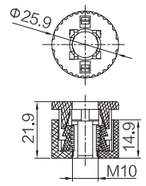

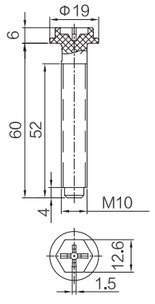

Application

· For matching toilet seat hinge and ceramic hole (bottom lock)
· Fast assemble and disassemble

Characteristics

· POM bolts
· POM screw nuts
· For matching I290/I256/I260

Coding information

Item code	Description
I356-YYB1	POM bolts(M10) bottom lock

Toilet Seat Bolts I260



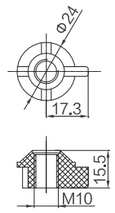

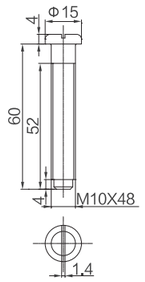

Application

· For matching toilet seat hinge and ceramic hole (bottom lock)

Characteristics

· POM bolts
· POM screw nuts
· For matching I356/I256/I290

Coding information

Item code	Description
I260-YYB1	POM bolts bottom lock

Toilet Seat Bolts I165



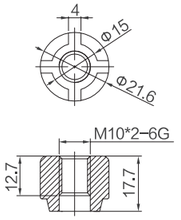

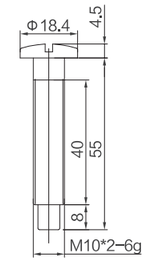

Application

· For matching toilet seat hinge and ceramic hole (bottom lock)

Characteristics

· POM bolts
· POM screw nuts

Coding information

Item code	Description
I165-YYB1	POM bolts bottom lock

Toilet Seat Bolts I504



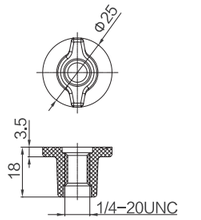

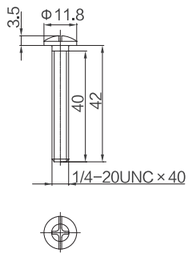

Application

· For matching toilet seat hinge and ceramic hole (bottom lock)

Characteristics

· Stainless steel G1/4 bolts
· PP screw nut

Coding information

Item code	Description
I504-YYB1	Stainless steel bolts bottom lock

ECOTECH

SMART WATER